EDL-KGL

EUROMOTOELECTRICS.COM
ENDURALAST
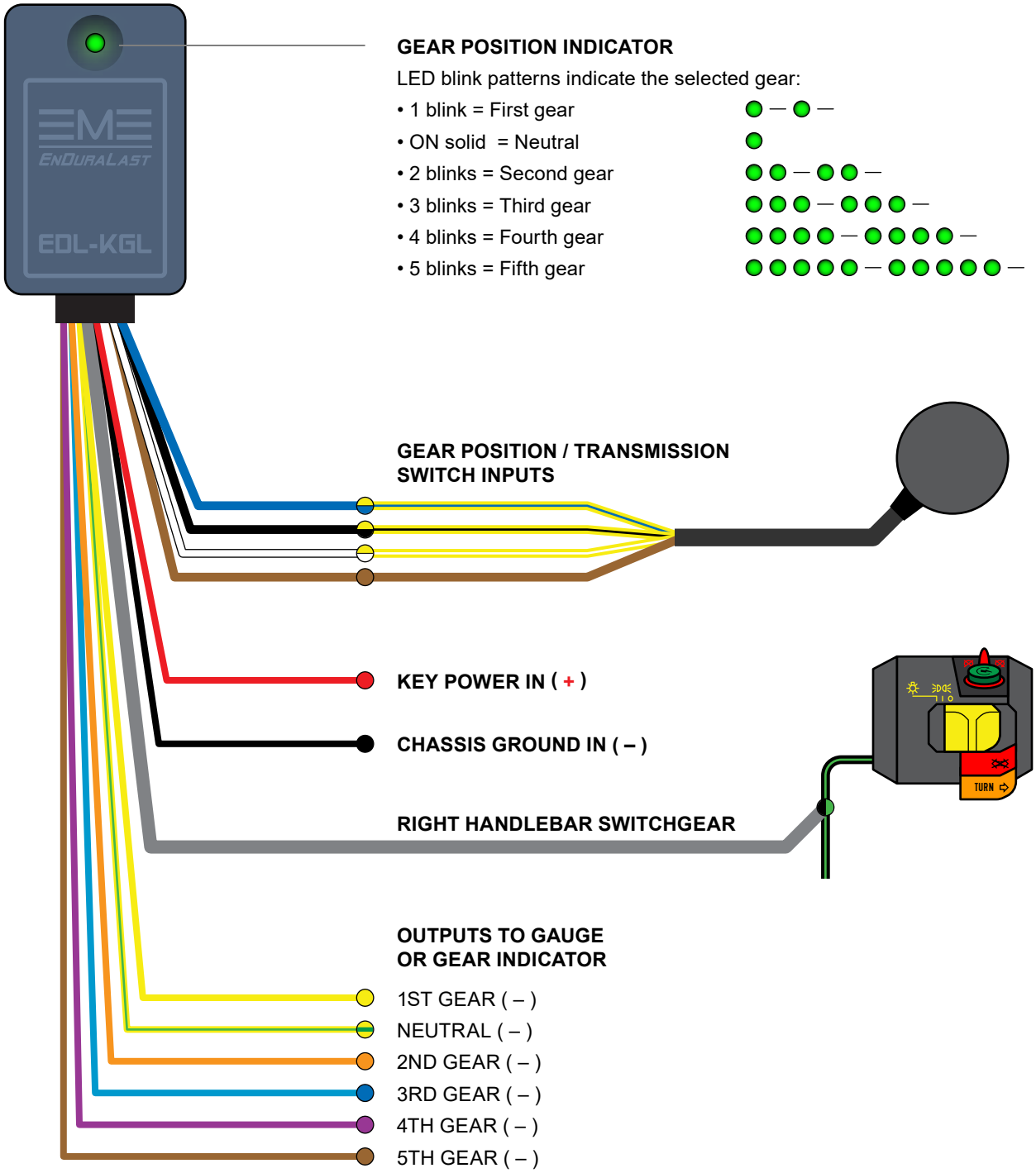
K-Series Gear Logic Module