NWT CYCLETRONIC

X3.S Specific Installation
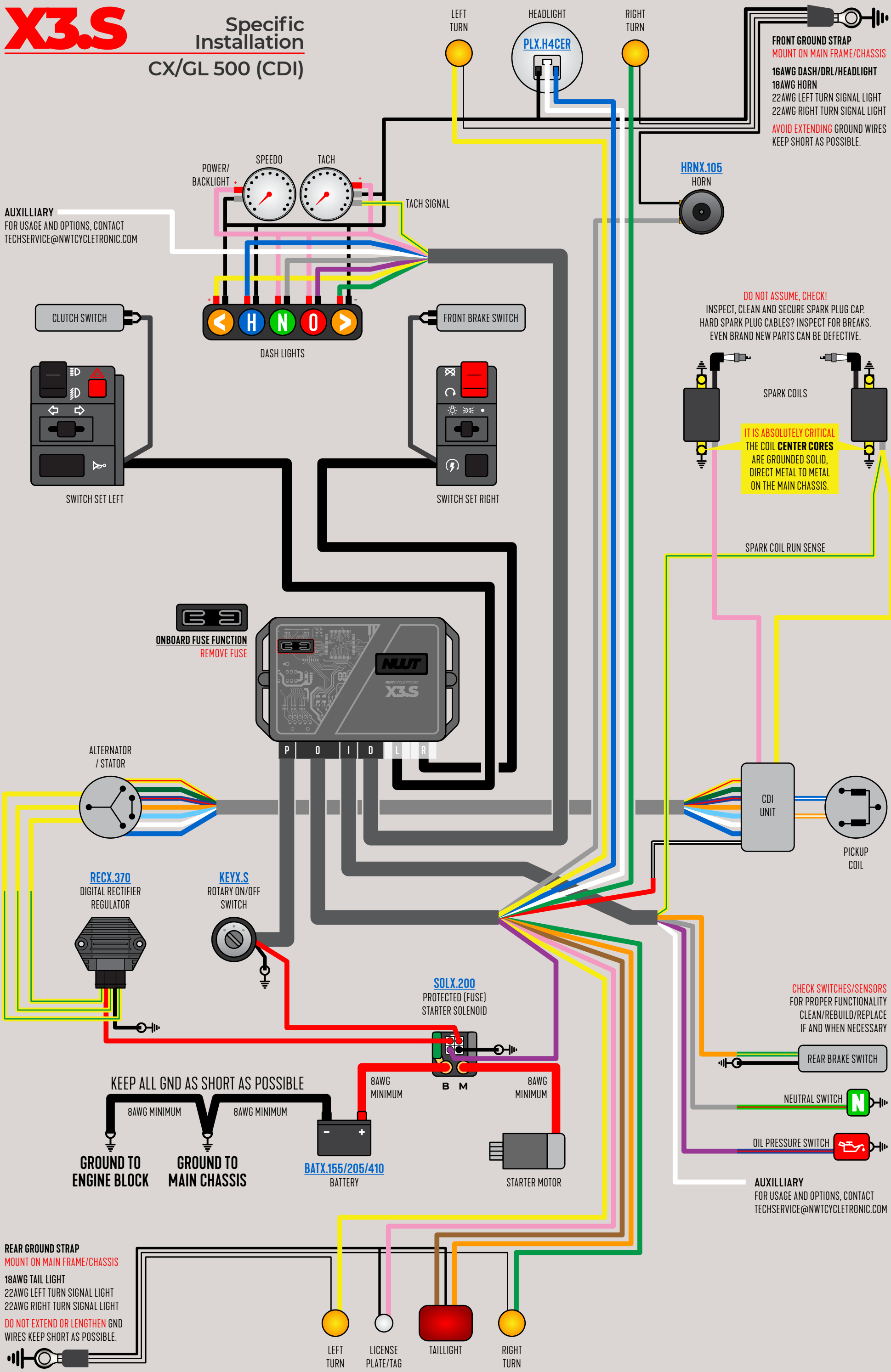
CX/GL 500 (CDI)